PREPARATION FOR WOOD DOOR

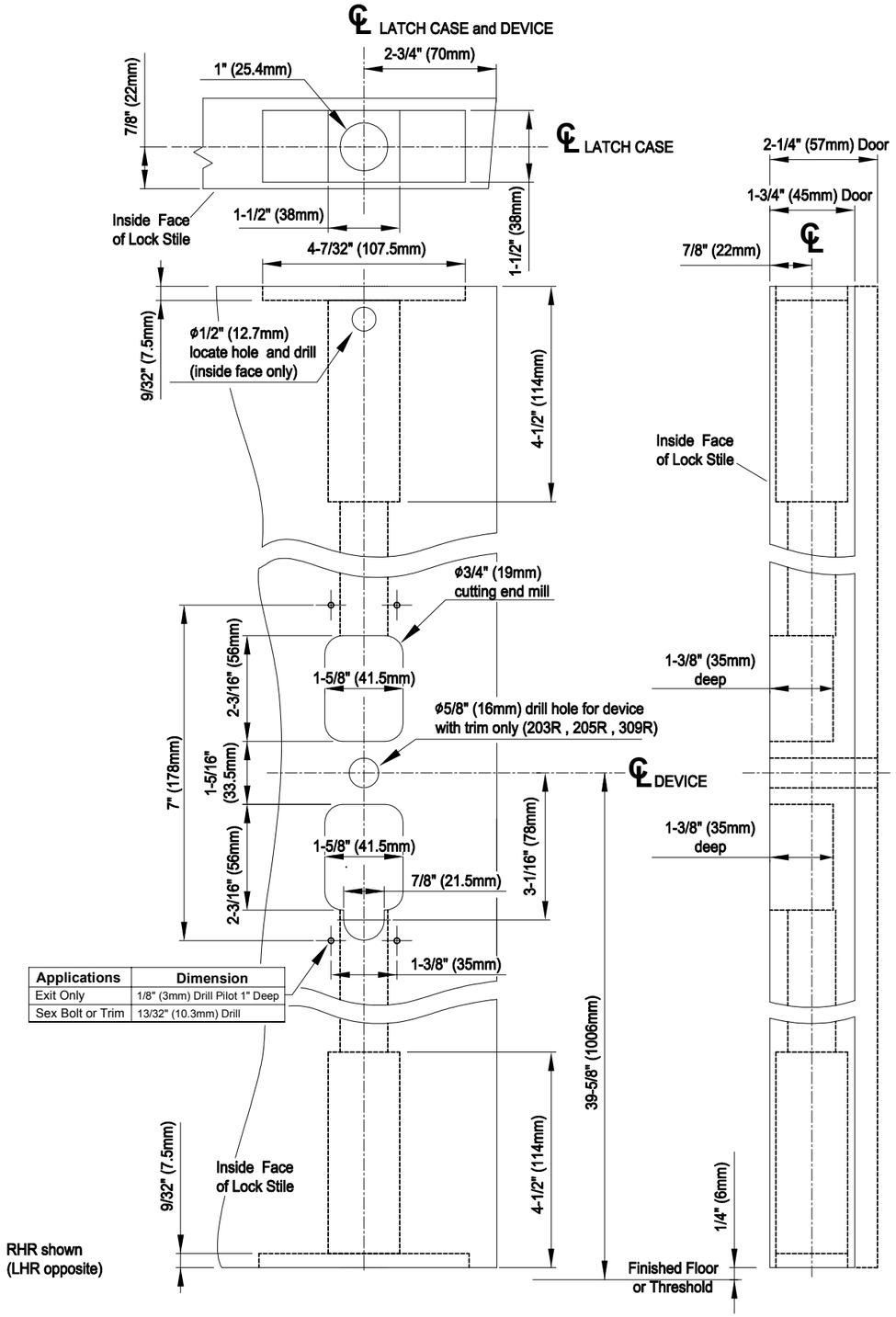

Applications	Dimension
Exit Only	1/8" (3mm) Drill Pilot 1" Deep
Sex Bolt or Trim	13/32" (10.3mm) Drill

WD-OD002(547)

Klacci® life unlocked.

1300/F1300 SERIES CONCEALED VERTICAL ROD DEVICE

INSTALLATION INSTRUCTIONS

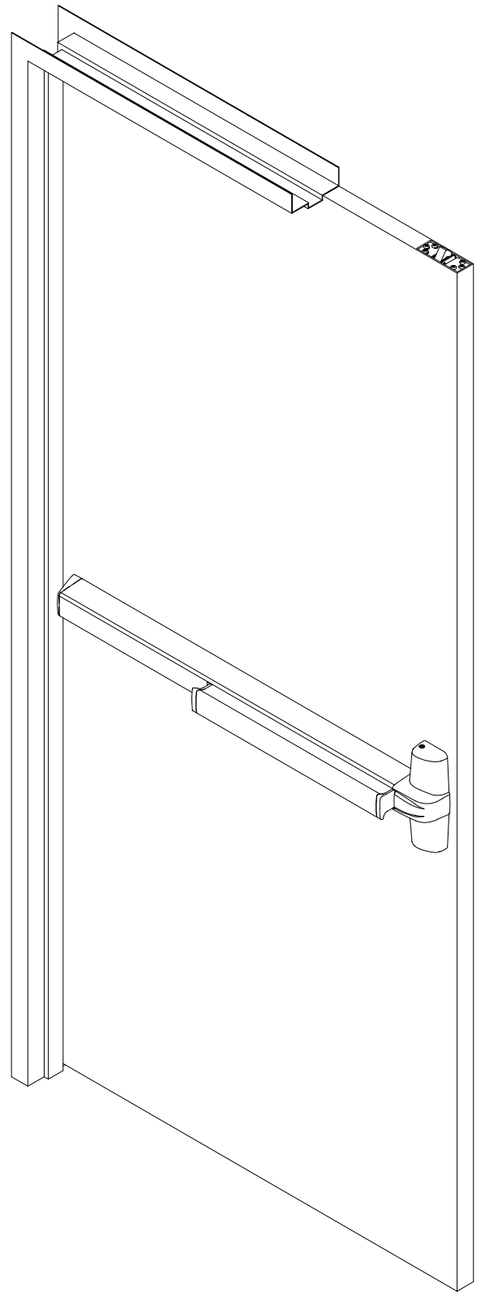

Patent No. 7,634,927 7,748,757 D623,499 7,836,738 7,887,107 and other patents pending.

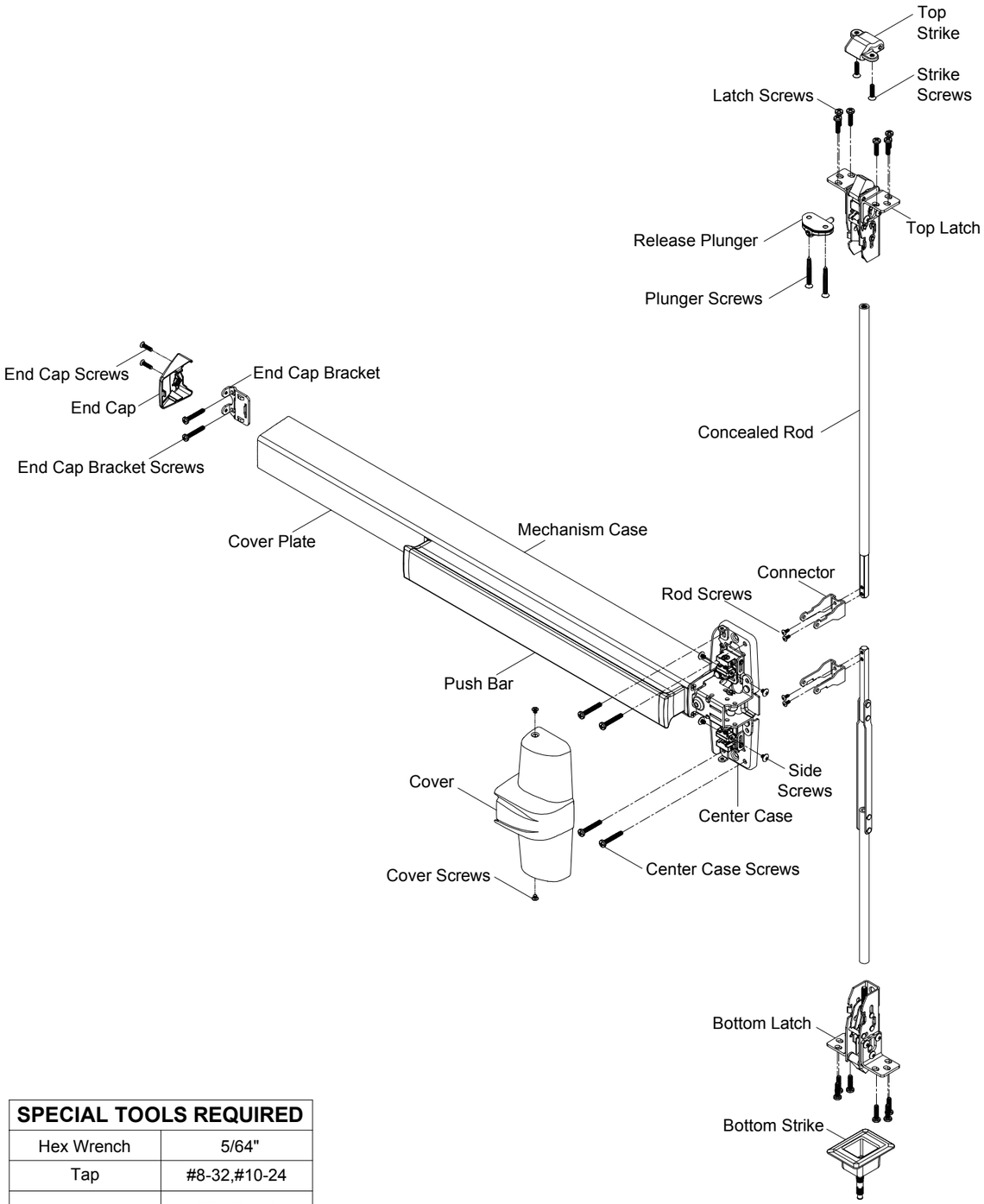

SPECIAL TOOLS REQUIRED	
Hex Wrench	5/64"
Tap	#8-32,#10-24
Drill Bits	#25,1/8",1/4", 5/16",13/32"
Spade Drill	5/8" (For Wood Door)

OPTIONAL DOGGING

CYLINDER DOGGING

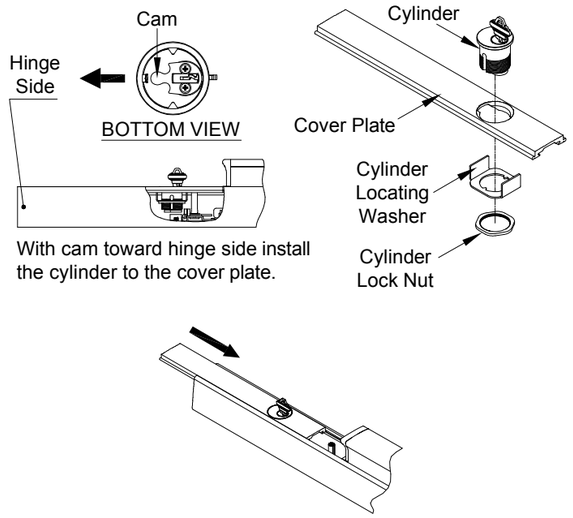

With cam toward hinge side install the cylinder to the cover plate.

Slide cover plate in position in the mechanism case.

DOGGING CHECK

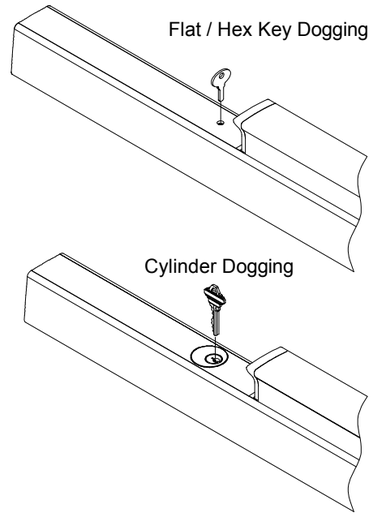

Depress push bar and turn flat / hex wrench or key one full turn for dogging check.

CUT DEVICE (IF REQUIRED)

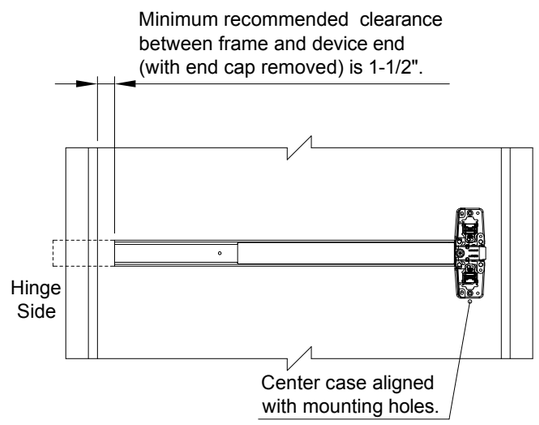

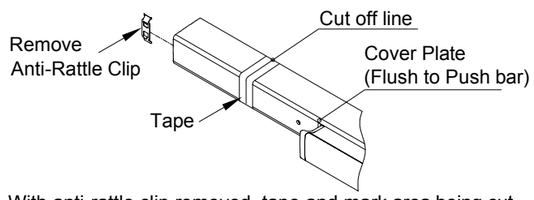

1. With anti-rattle clip removed, tape and mark area being cut.

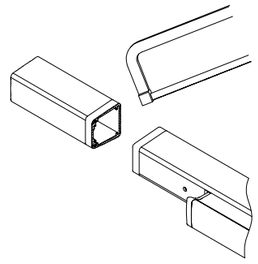

2. Cut off device and deburr.
NOTE: Device must be cut perpendicularly for proper end cap fit.

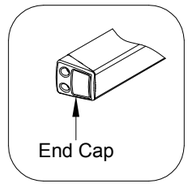

INSTALL FIRE BOLT

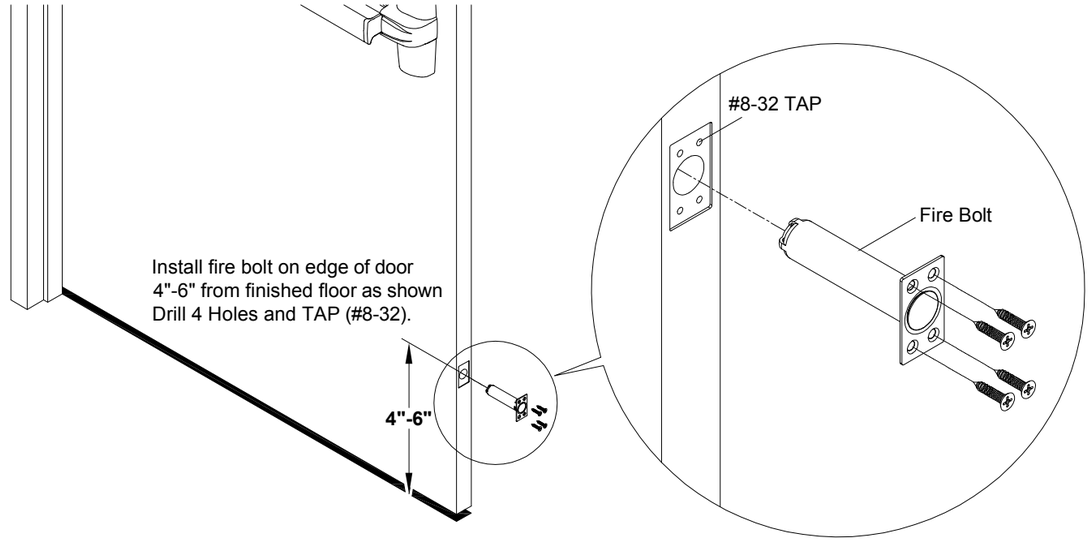

NOTE: Fire rated device with less bottom rod (LBR) applications must use FIRE BOLT.

CUT TOP ROD / EXTEND TOP ROD

CUT TOP ROD

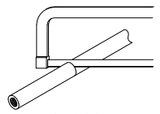

Step 1: Cut off the rod to fit the door's dimension . Measure from flat end.

NOTE: Rod cutting is required for doors shorter than 7'.

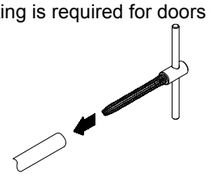

Step 2: Tap #1/4-20 ; 1" deep.

EXTEND TOP ROD

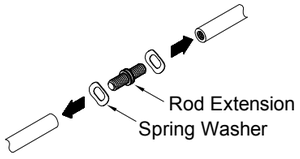

Install rod extension & spring washer to connect two(2) rods tightly.

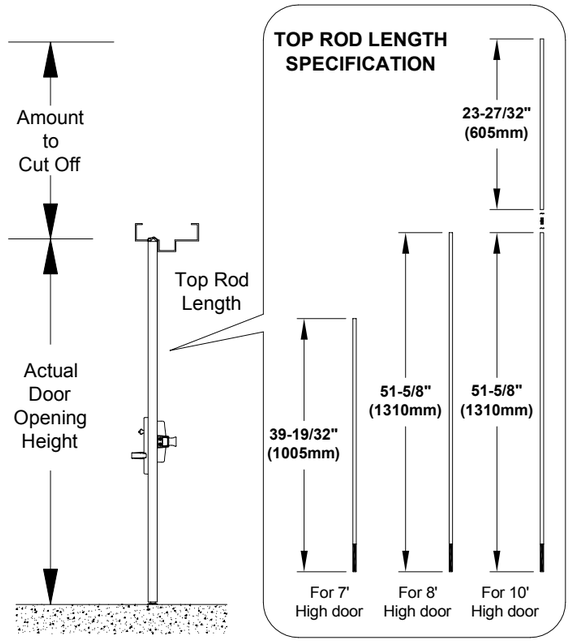

SCREW CHART

APPLICATION	METAL	SEX BOLTS	WOOD
Center Case Screws	C No.10-24 x 1-11/32" 4 PCS	C No.10-24 x 1-11/32" 4 PCS G No.10-24 x 1-3/32" 4 PCS	A No.10-12 x 1-11/32" 4 PCS
End Cap Bracket Screws	C No.10-24 x 1-11/32" 2 PCS	C No.10-24 x 1-11/32" 2 PCS G No.10-24 x 1-3/32" 2 PCS	A No.10-12 x 1-11/32" 2 PCS
Plunger Screws		P No.10-24 x 1-5/8" 2 PCS	
216 Strike Screws	E No.10-24 x 11/16" 2 PCS		B No.10-12 x 1-11/32" 2 PCS
225 Strike Screws	E No.10-24 x 11/16" 2 PCS		
Top / Bottom Latch Screws	D No.10-24 x 25/32" 6 PCS		A No.10-12 x 1-11/32" 6 PCS
227 Strike Screws	N No.1/4-20 x 5/8" 1 PCS	O No.1/4-20 x 5/8" 1 PCS	
Side Screws	L No.8-32 x 7/32" 4 PCS		
Top / Bottom Rod Screws	M No. 8-32 x 5/16" 2 PCS		
End Cap Screws	J No.8-32 x 5/8" 2 PCS		
Cover Screws	I No.8-32 x 5/32" 2 PCS		

DOOR PREPARATION CHART

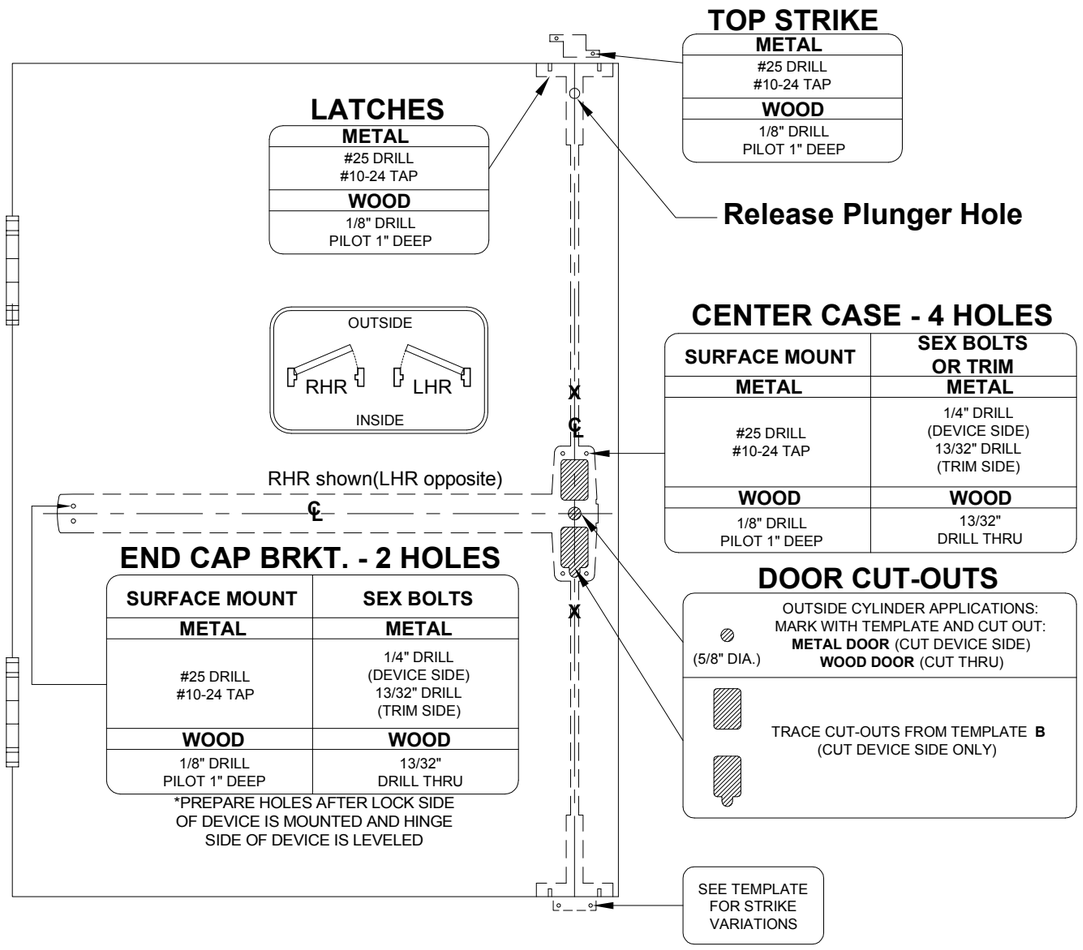

LATCH HOLE PREPARATION

(Drill Top and Bottom of Door)

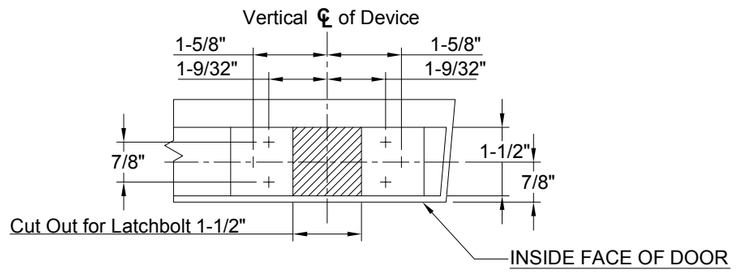

14 ADJUST LATCHES AND SECURE TOP & BOTTOM LOCKING SCREWS.

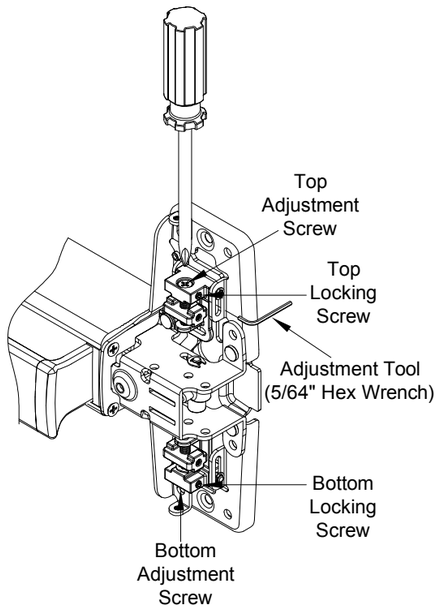

1. Depress push bar to retract the latch bolt and open the door.
2. Check top latch for HOLDBACK (Latchbolt stays retracted in latch case). **See Figure 1**
3. Loosen top locking screw.
4. Rotate top adjustment screw until top latchbolt is fully retracted.
5. Release top latchbolt. **See Figure 2**
6. Check top latchbolt for DEADLOCK (Latchbolt should not push in).
7. Rotate top adjustment screw until top latchbolt is in DEADLOCK.
8. Tighten top locking screw.
9. Depress push bar and retract latchbolt.
10. Make sure top latchbolt stays retracted as shown. **See Figure 1**
11. Loosen bottom locking screw.
12. With top latchblot still retracted, adjust bottom rod by rotating bottom adjustment screw, so latchbolt clears floor and bottom strike in HOLDBACK. **See Figure 3**
13. Release top latchbolt. **See Figure 2**
14. Check bottom latchbolt for DEADLOCK.
15. Tighten bottom locking screw.
16. Open and close door several times and check device operation and function of DEADLOCK & HOLDBACK.

Figure 1

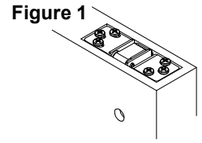

Figure 2

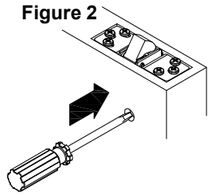

Figure 3

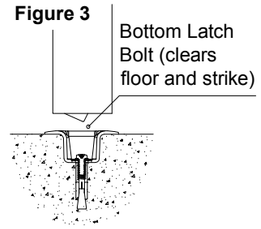

FRAME PREPARATION

216 STRIKES

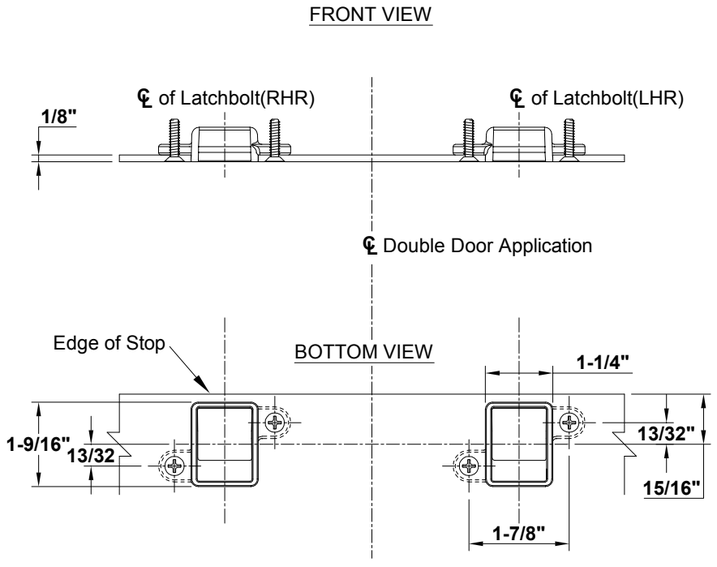

RELEASE PLUNGER

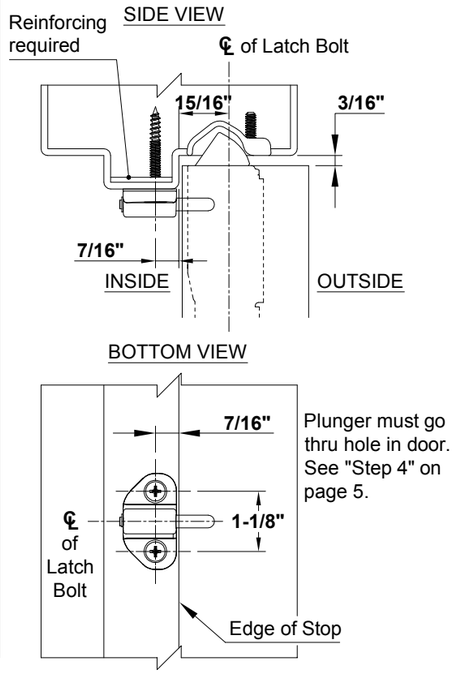

Plunger must go thru hole in door. See "Step 4" on page 5.

12 HANG DOOR AND INSTALL TOP STRIKE & RELEASE PLUNGER.

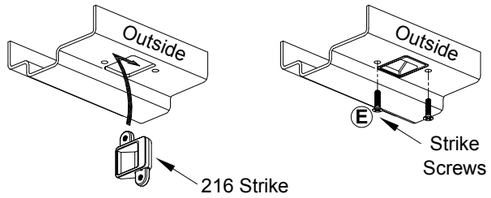

See "FRAME PREPARATION" on page 9 for cut-out and holes. After preparing, install top strike into door frame and mount two(2) strike screws.

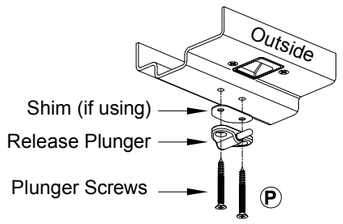

See "FRAME PREPARATION" on page 9 for holes. After preparing, install release plunger with two(2) plunger screws.

13 INSTALL BOTTOM STRIKE.

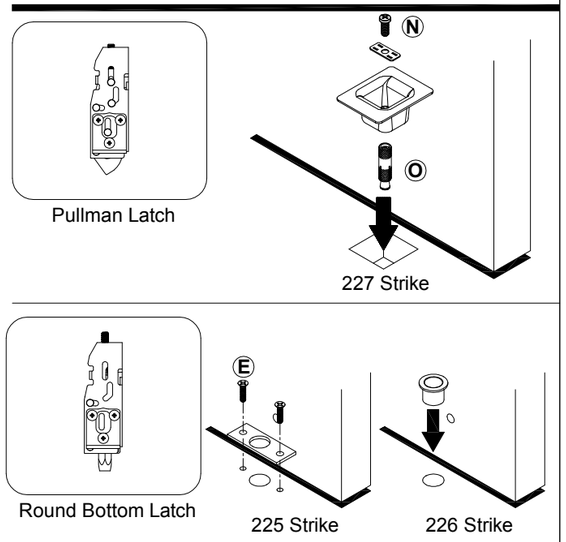

1. Mark floor for fasteners, prepare floor according to the type of strike and fastener furnished. Provide clearance in floor for bolt.
2. For threshold application:
   Provide hole in threshold according to type of strike and fasteners furnished.

15 INSTALL CASE COVER.

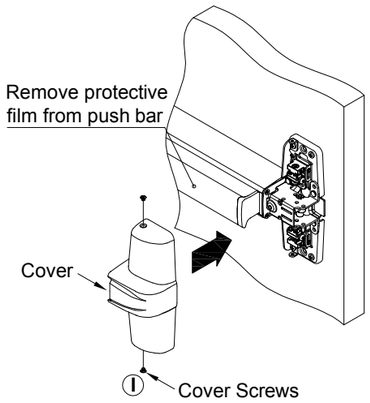

Attach cover to center case with two(2) center case screws.

227 STRIKE HOLE PREPARATION

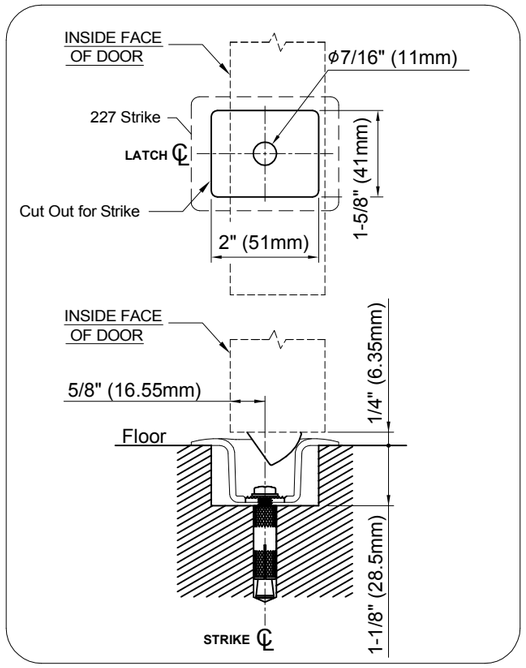

1 DRAW HORIZONTAL DEVICE CENTER LINE(℄).

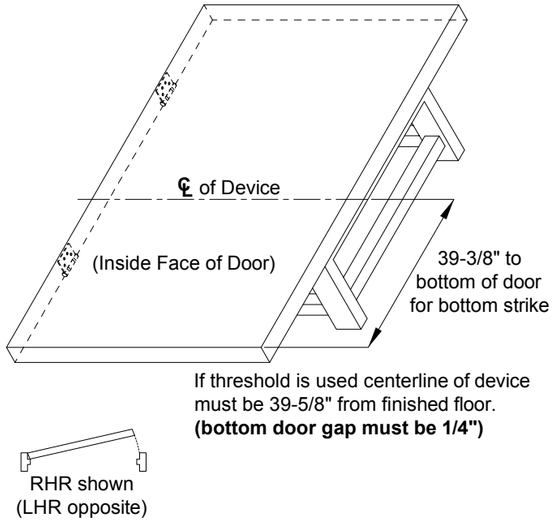

If threshold is used centerline of device must be 39-5/8" from finished floor. **(bottom door gap must be 1/4")**

Lay door in place and draw horizontal device center line as shown.

2 DRAW VERTICAL ℄ & MARK BACKSET.

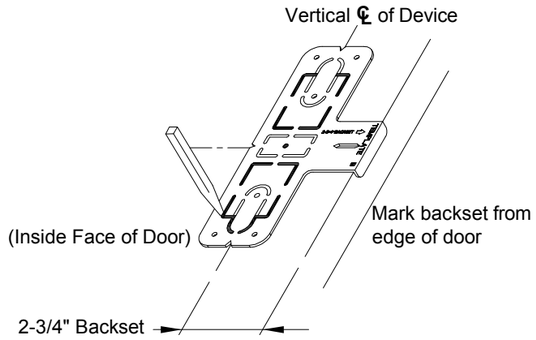

Position template as shown, then mark vertical center line for device center case.

3 PREPARE DOOR FOR DEVICE AND TOP & BOTTOM LATCH.

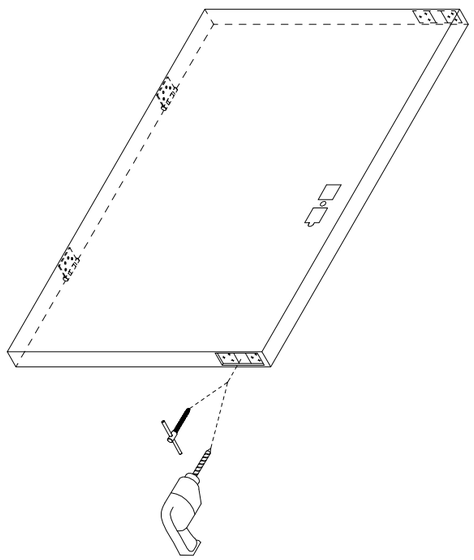

See "DOOR PREPARATION CHART" on page 4 for drill tap, and cut-out information.

4 DRILL TOP OF DOOR FOR RELEASE PLUNGER.

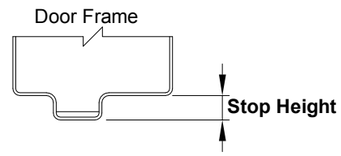

Stop Height	A
1/2"	11/16"
5/8"-Std.	13/16"
3/4"	15/16"

Measure "**Stop Height of Door Frame**" to decide "**Dimension of A**".

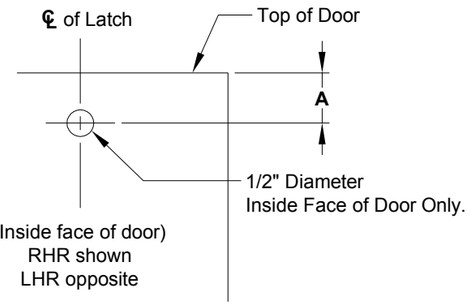

5 DETERMINE USE OF NL DRIVE SCREW.

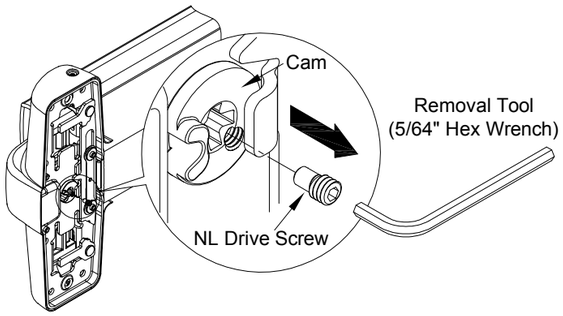

NL driver screw is factory assembled in cam on back of device center case, when the NL drive screw is left in back of center case, the outside cylinder will function only as a Night Latch.

NOTE: 1. **DO NOT** remove NL drive screw for Pull Plate or Escutcheon with night latch cylinder.
2. **REMOVE** NL drive screw from back of center case when installing trim that has a functional lever, knob, or thumbpiece AND an outside cylinder to lock and unlock the trim.

6 ATTACH RODS TO LATCHES.

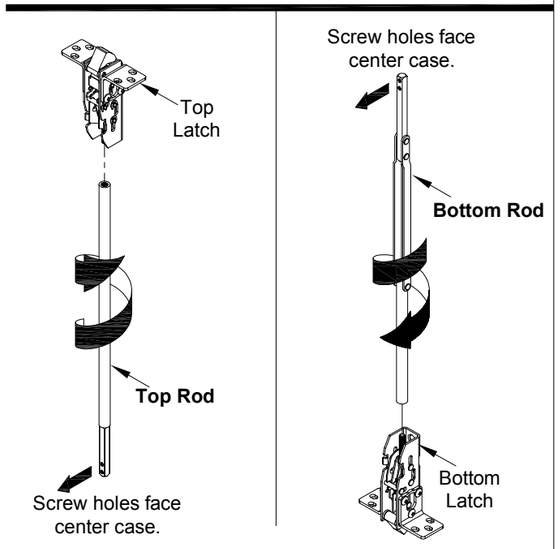

Thread rod onto latch stud until screw holes in rod bars face center case.

7 INSTALL RODS AND LATCH.

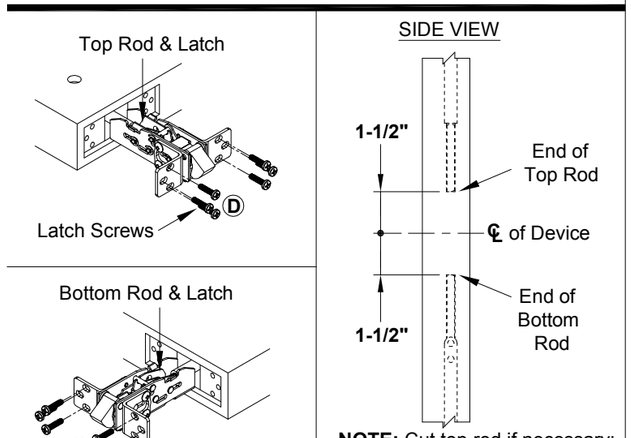

NOTE: Cut top rod if necessary; cut end of rod and tap. See "CUT TOP ROD / EXTEND TOP ROD" on page 10.

1. Install top latch and latch screws from top of door.
2. Install bottom latch and latch screws from bottom of door.
3. Fine tune the overall length by threading latch in or out of rod.

8 INSTALL CONNECTORS.

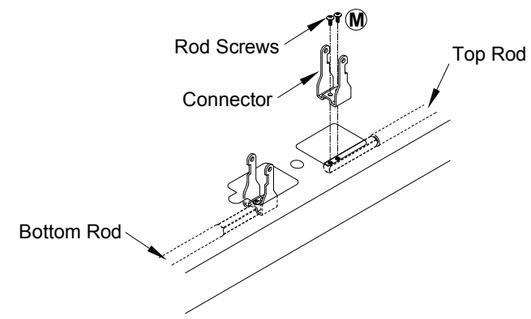

After adjusting the lengths, Install connectors on both concealed rods with rod screws.

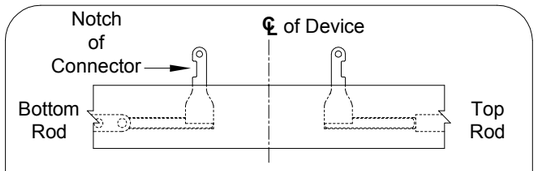

NOTE: Locate notch of connector in top rod toward top of door, and notch of connector in bottom rod toward bottom of door.

9 INSTALL TRIM (IF USING) AND SECURE DEVICE CENTER CASE TO DOOR.

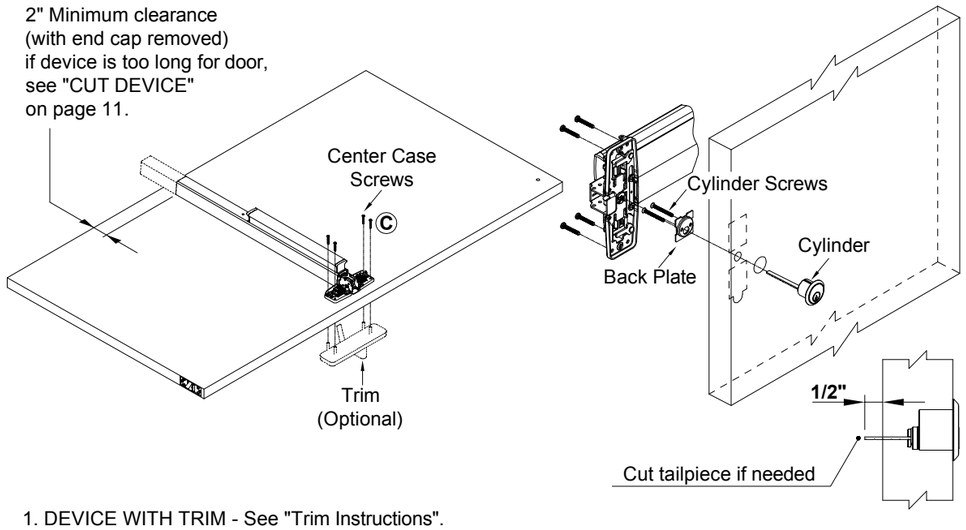

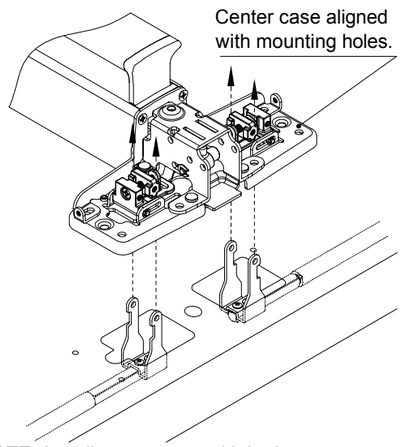

NOTE: Install center case with both connectors go through clearance between retractors and center case.

1. DEVICE WITH TRIM - See "Trim Instructions".
2. CYLINDER ONLY - Install cylinder with cylinder back plate as shown. Make sure the tailpiece is extending 1/2" from the inside face of door. Insert tailpiece into cam in the center case and mount it to the door with four(4) center case screws.
3. EXIT ONLY - Mount center case to the door with four(4) center case screws.

10 INSTALL MOUNTING BRACKET AND END CAP.

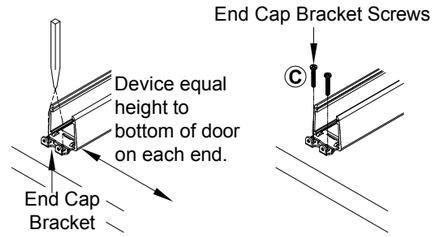

1. Remove cover plate, insert end cap bracket into push bar assembly against mechanism case. Level device, mark and drill two(2) holes for Bracket Screws. Fasten end cap bracket screws to door.

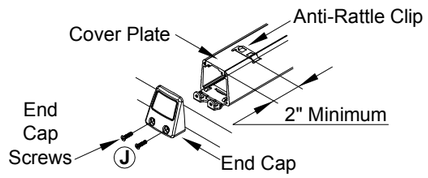

2. Insert cover plate, slide anti-rattle clip in position(2" minimum from end), and attach end cap with two(2) end cap screws.

11 INSTALL SIDE SCREWS.

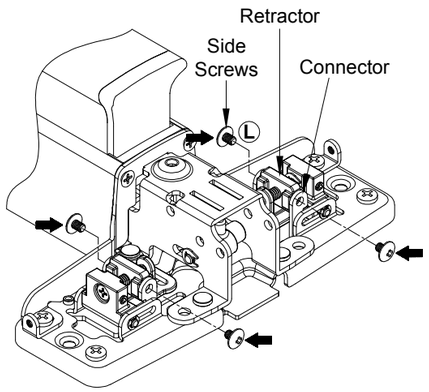

1. Make sure both latchbolts are extended.
2. Apply both sides "side screws" through round holes in connector with threaded holes in retractors and tighten.

NOTE: Both sides of connectors and retractors must have side screws installed.